Primer

DES-F
Spotting tables

FEATURES

DES-F / DES-F GC
Cold spotting table with built-in suction unit and as option: in-built compressor.
• Featuring two cold spotting guns with independent circuits, two receptacles for liquids, hose support and swinging arm with suction.
• Satinless steel AISI 304 spotting shape.
• Plate dimensions: 800x260x175mm.
• Compressed air required: consumption 200 Nl/min, pressure 4-8 bar.
• Electrical connection: 230V I +N / 50-60Hz.
• **New DES-F GC model** with built-in compressor.

MINI-DES
Compact cold spotting table.
• Equipped with two cold spotting guns with independent circuit and two tanks for solvents.
• One working pedal.
• Stainless steel AISI 304 board (400 x 200 x 35 mm).
• Electric connection: 230V I+N / 50-60Hz.
• It needs compressed air: consumption 30 Nl/min, air working pressure 6-8 bar.

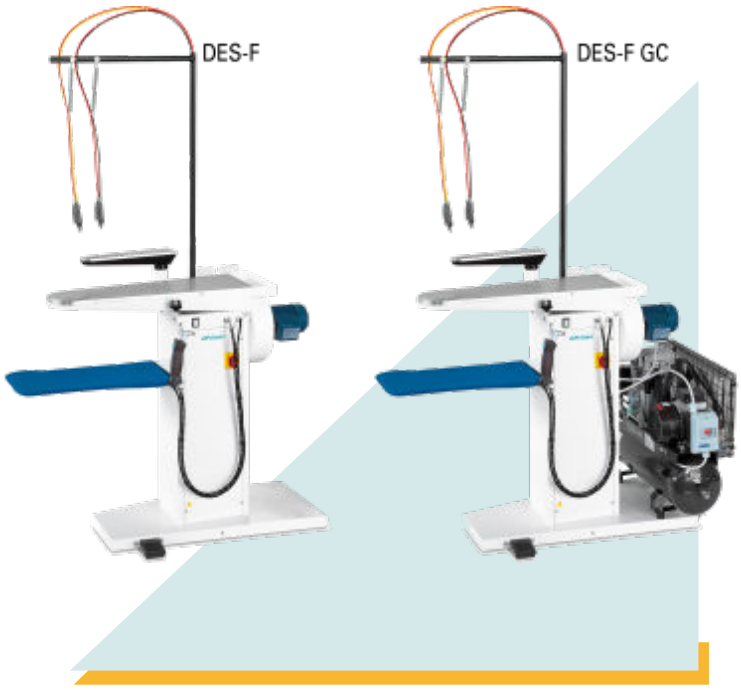

OPTIONS

• DES-F compressor
• Steam gun for DES-F

GENERAL DETAILS	UNIT.	DES-F
Board dimensions	mm	800 x 260 x 175
Boiler	-	NO
Compressor	-	OPT
Steam gun	-	OPT
POWER		
Vacuum motor	HP	0,6
Compressor motor	kW	2
CONNECTIONS		
Ø Steam inlet	BSP	3/8"
Ø Condensate outlet	BSP	3/8"
Steam supply pressure	bar	4-6
Steam working pressure	bar	5
Steam consumption	kg/h	3-5
Ø Air inlet	BSP	1/4"
Ø Air outlet	mm	90
Steam pressure	bar	5-8
Steam Consumption	Kg/h	6
Air Consumption	Nl/min	150
DIMENSIONS / PACKING DIMENSIONS		
Net width / Gross width	mm	1.270 / 1.300
Net depth / Gross depth	mm	600 / 650
Alto neto / Alto bruto (antena plegada)	mm	1.900 / 1.160
Net weight / Gross weight	Kg	44 / 53
Volume	m³	1,45 / 0,98
OTHERS		
Voltage	V	230V 1~ 50-60
Sound level	dB	<70

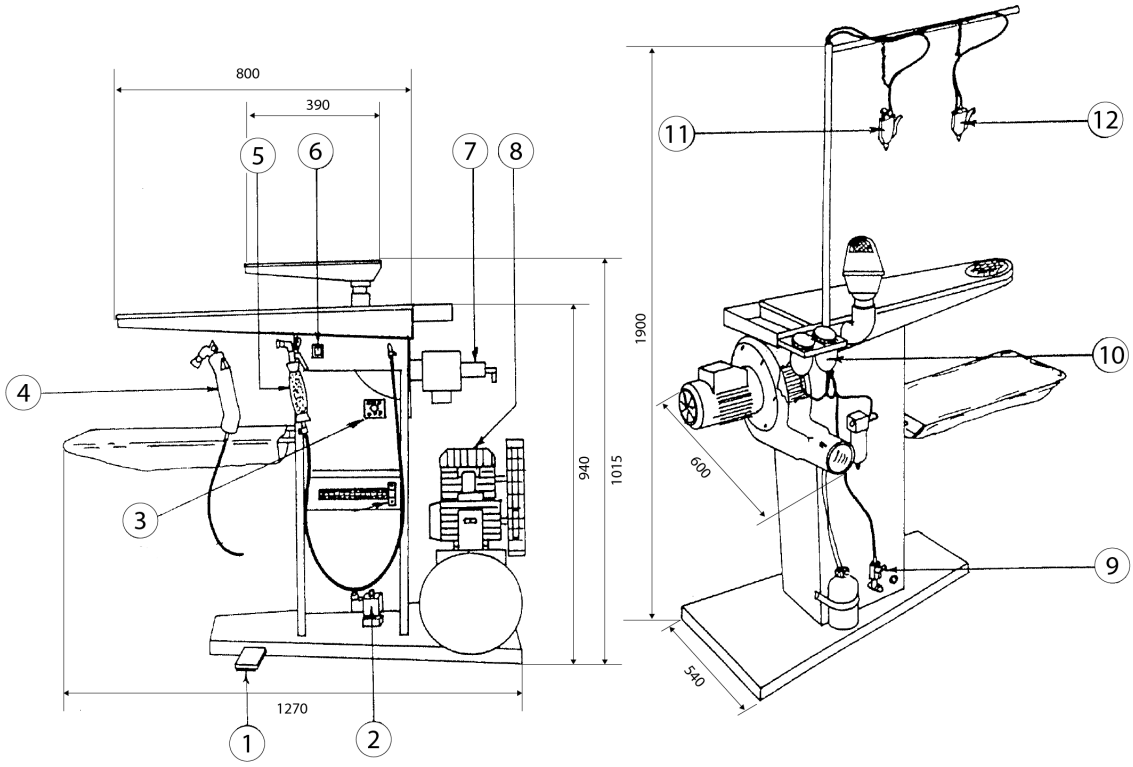

1 .Suction pedal.
2. Air solenoid valve.
3. Three-pole / four-pole selector switch 40 A.
4. Air/steam gun (OPT).
5. Air gun.
6. Switch.
7. Centralised suction valve.
8. Compressor (OPT).
9. Water tap.
10. Stain-removal liquid tank.
11. Spray gun.
12. Spotting gun.