Primer

# MAN-COAT
## Mannequins of jackets

## FEATURES

**MAN-SHIRT**
**From-finisher: steam body former for both washed and dry-cleaned shirts, anoraks and jackets, without boiler. To be connected to a steam and compressed air supply.**
• Powerful 3 HP fan.
• Pneumátic sleeve stretchers.
• Electronic card featuring ten ironing programs.
• Front heated and reclining panel.
• Button placket part of the dummy with suction.
• Rear pneumatic panel.
• Adjustable mirror.
• Asjustable dummy size by menas of a pneumatic system.
• Voltage: 400V 3 50/60Hz.



**MAN-COAT**
**Automatic tensioning finisher for classic coats, overcoats and similar garments.**
• Working cycle by a card with 9 stored finishing programs.
• Telescopic shape till 1.500mm.
• Special 350º revolving body form plus automatic front & rear paddle clamps.
• Sensor for the automatic research of the height of the garment.
• Double antistretching system in large (waist) and in height (lenght).
• Mechanical adjustable shoulder group and dedicated collar clamp.
• Damper for air-volume regulation.
• For central steam & compressed air supply line.
• Suitable for Wet Cleaning.

| GENERAL DETAILS | UNIT. | MAN-COAT |
|---|---|---|
| Boiler | - | NO |
| Boiler capacity | L | - |
| Group of iron | - | OPT |
| Steam gun | - | - |
| **POWER** | | |
| Pump motor | HP | - |
| Boiler heater | kW | - |
| Fan motor | kW | 1,2 |
| **CONNECTIONS** | | |
| Ø Water inlet | BSP | - |
| Ø Boiler exhaust (mod. with boiler) | BSP | |
| Ø Steam inlet | BSP | 1/2" |
| Ø Condensate outlet | BSP | 1/2" |
| Steam pressure | bar | 5 |
| Steam consumption | Kg/h | 15-20 |
| Ø Air inlet | BSP | 1/4" |
| Ø Air outlet | mm | 1/4" |
| Air pressure | bar | 6 |
| Air Consumption | Nl/min | 8 |
| **DIMENSIONS / PACKING DIMENSIONS** | | |
| Net width / Gross width | mm | 690 / 800 |
| Net depth / Gross depth | mm | 950 / 1.050 |
| Net height / Gross height | mm | 1550 -2250 / 1.850 |
| Net weight / Gross weight | kg | 160 / 180 |
| Volume | m³ | 1,04-1,88 / 1,55 |
| **OTHERS** | | |
| Voltage | V | 230/400V 3~ 50-60 |
| Sound level | dB | 70 |

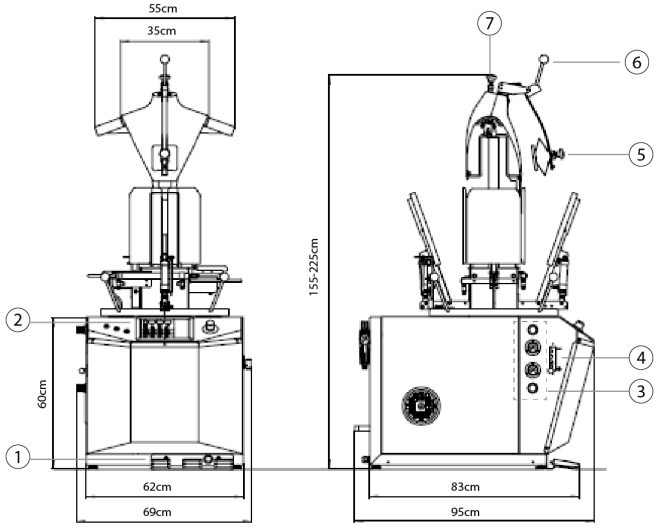


1. Operating pedals.
2. Control panel.
3. Flap adjustment and garment tension control buttons.
4. Blowing intensity adjustment.
5. Collar press flap.
6. Collar press flap opening and closing lever.
7. Shoulder width adjustment knob.