Primer

TOPPER-C
Mannequins and toppers

FEATURES

MAN / MAN-C
Utility form-finisher ideal fot the finishing of coats, jackets, dresses, etc.
• Automated working cycles.
• Electronic card.
• Possibility to set nine different cycles, and regulation of streaming and drying time.
• Adjustable shoulder width and height of the dummy.
• Rotation 360º of dummy support (frame) and controls.

MAN (without boiler)
• Without steam boiler, to be connected to a central steam supply.
• It needs a steam inlet and outlet.
• Can be installed with steam generator SB-24 - 12 kW.
• Voltage: 230V 3 / 400V 3 50Hz.

MAN-C (with boiler)
• Complete with built-in steam boiler 18 lt.
• Automatic water feeding.
• Automatic pressure control (4,5 bar).
• Voltage: 230V 3 / 400V 3 50Hz.



TOPPER-A / TOPPER C
Finishing topper for trousers, with air-operated waistband and leg stretching devices.
• Side waistband stretching device.
• Height adjustable leg stretching carriage and stainless steel leg clamps.
• Built-in three-phase fan; air heating device.
• Electronic card for the setting of nine ironing cycles in total.
• Ironing cycle controlling: streaming time, setam/air time, drying time. Three pressure regulators (for leg clamps, waistband stretcher and leg stretching carriage).
• Switch for the exclusion of the leg stretching carriage.
• Manual size indicator.
• Mechanical airflow regulator.

TOPPER (without boiler)
• Without boiler.
• Needs connection to external steam source.
• Can be connected to SB-24 steam generator.

TOPPER-C (with boiler)
• With built-in boiler.
• Electric operation.

GENERAL DETAILS	UNIT.	TOPPER-C
Boiler	-	SÍ
Boiler capacity	L	5
Group of iron	-	-
Steam gun	-	-
POWER		
Pump motor	HP	-
Boiler heater	kW	6
Fan motor	kW	1-1,5
CONNECTIONS		
Ø Water inlet	BSP	-
Ø Boiler exhaust (mod. with boiler)	BSP	-
Ø Steam inlet	BSP	-
Ø Condensate outlet	BSP	-
Steam pressure	bar	5
Steam consumption	Kg/h	-
Ø Air inlet	BSP	1/4"
Ø Air outlet	mm	-
Air pressure	bar	5
Air Consumption	Nl/min	40
DIMENSIONS / PACKING DIMENSIONS		
Net width / Gross width	mm	1.115 / 1.210
Net depth / Gross depth	mm	630 / 780
Net height / Gross height	mm	1.950 / 2.100
Net weight / Gross weight	kg	165 / 225
Volume	m^3	1,37 / 1,98
OTHERS		
Voltage	V	230/400V 3~ 50-60
Sound level	dB	70

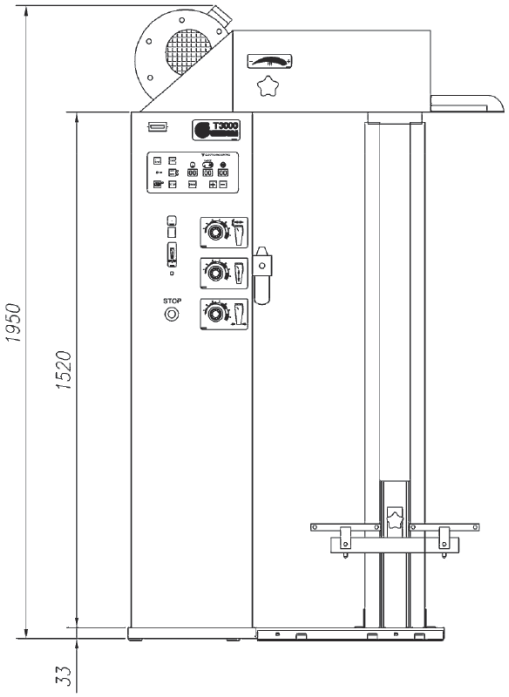

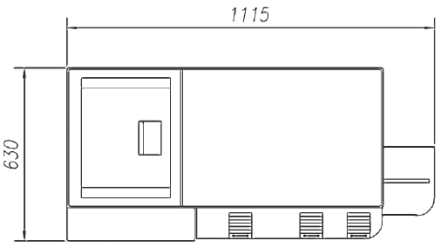

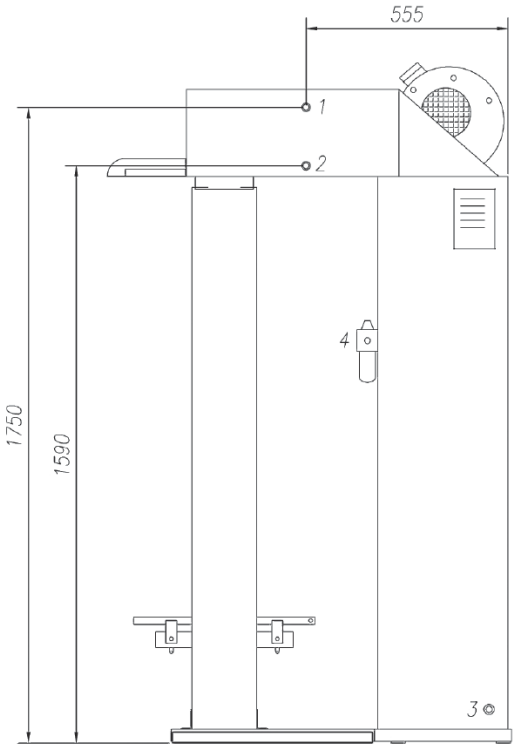

01. Steam inlet
02. Condensate purge
03. Inlet electrical power
04. Compressed air inlet